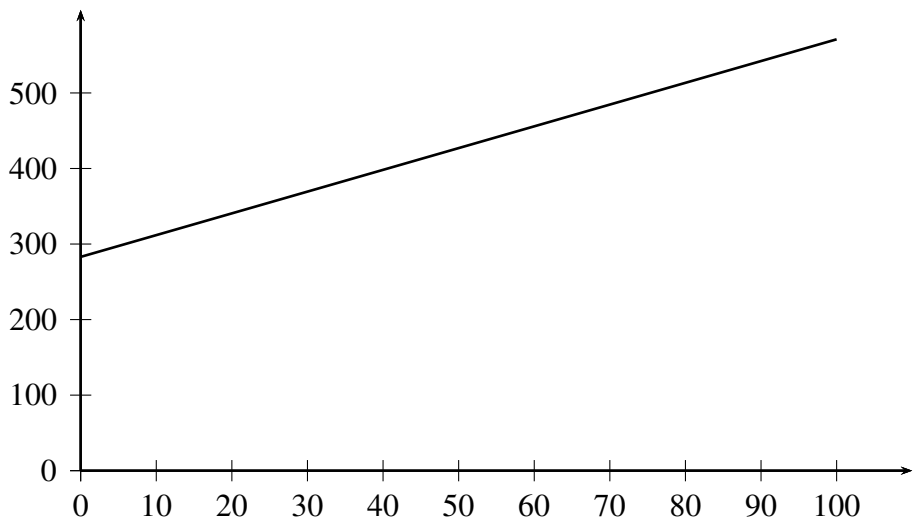

Figure 1.4: Solubility of Sodium Chloride in water with fitted curve.

where

$$D = \begin{vmatrix} n & \sum T \\ \sum T & \sum T^2 \end{vmatrix}, \quad N_a = \begin{vmatrix} \sum d & \sum T \\ \sum Td & \sum T^2 \end{vmatrix}, \quad N_b = \begin{vmatrix} n & \sum d \\ \sum T & \sum Td \end{vmatrix} \tag{4.6}$$

Using these formulas, we have

$$D = \begin{vmatrix} 11 & 550 \\ 550 & 38500 \end{vmatrix} = 121,000 \tag{4.7}$$

$$N_a = \begin{vmatrix} 4702 & 550 \\ 266820 & 38500 \end{vmatrix} = 34,276,000 \tag{4.8}$$

$$N_b = \begin{vmatrix} 11 & 4702 \\ 550 & 266820 \end{vmatrix} = 348,920 \tag{4.9}$$

$$\tag{4.10}$$

so that

$$a = \frac{34276000}{121000} = 283.3 \tag{4.11}$$

$$b = \frac{348920}{121000} = 2.88 \tag{4.12}$$

As a result the equation of the best line, plotted in figure 1.4, passing through the data points becomes

$$d = 283.3 + 2.88T \tag{4.13}$$

29. A 2 kg block rests on a plane inclined at 30 degrees with a coefficient of kinetic friction of 0.400. A horizontal force of 20 N pulls the block up the incline. What will be the acceleration of the block up the incline? ans. 1.70 m/sec^2

10 Kinematics

10.1 Definitions and terminology

The purpose of kinematics is to provide a means of locating an object with respect to an established reference point and for calculating the velocity and acceleration of the object. For this purpose, we will utilize the Cartesian coordinate system and define the position of an object with the three cartesian coordinates (x, y, z) as illustrated in figure 2.15.

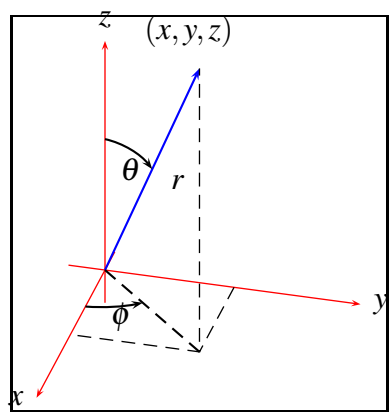

Figure 2.15: Particle located in three-dimensions

In this coordinate system the vector $\vec{r}$ defines the distance from the origin to the particle, the angle θ measures the inclination of $\vec{r}$ with respect to the z-axis and the angle ϕ measures the angle from the positive xz-plane to the point. In the Cartesian coordinate system the position of the particle can be represented in vector form as

$$\vec{r} = x\hat{i} + y\hat{j} + z\hat{k} \tag{10.1}$$

where the coordinates (x, y, z) are related to the vector $\vec{r}$ and angles θ and ϕ by

$$x = r\sin\theta\cos\phi \tag{10.2}$$
$$y = r\cos\theta\cos\phi \tag{10.3}$$
$$z = r\cos\theta \tag{10.4}$$

The velocity of the particle $\vec{V}$ is defined as the time rate of change of the position vector $\vec{r}$ and is tangent to the surface on which the particle is moving but not necessarily perpendicular to $\vec{r}$.

$$\vec{V} = \hat{i}V_x + \hat{j}V_y + \hat{k}V_z \tag{10.5}$$

13.2 Rotational kinematics

By integrating equation 13.15 we can obtain an equation for the angular velocity ω as a function of time very similar to the kinematic equation for linear velocity.

$$\int_{\omega_o}^{\omega} d\omega = \alpha \int_0^t dt \tag{13.27}$$

$$\omega = \omega_o + \alpha t \tag{13.28}$$

Similarly, we can obtain an equation for the angle of rotation θ as a function of time by integrating equation 13.16.

$$\int_{\theta_o}^{\theta} d\theta = \int_0^t \omega dt = \int_0^t (\omega_o + \alpha t)\, dt \tag{13.29}$$

$$\omega = \omega_o + \omega_o t + \frac{1}{2}\alpha t^2 \tag{13.30}$$

By combining these equations together, we can obtain an equation relating the change in angular velocity to the angle through which the system has rotated.

$$\omega^2 = \omega_o^2 + 2\alpha\,(\theta - \theta_o) \tag{13.31}$$

13.3 Moment of Inertia

The **center of mass** of a collection of mass points can be defined as the average of their mass weighted positions as illustrated in figure 3.5. For practical purposes the center of mass is the same as the **center of gravity** except in problems of planetary motion in which the acceleration of gravity may vary.

By its definition then, the center of mass for a collection of mass points m_i is located with the vector $\vec{r}$

$$\mathbf{r} = \frac{\sum m_i r_i}{\sum m_i} \tag{13.32}$$

Using the same approach, we can define the center of mass of a continuous distribution with mass density $\rho(r)$ and total mass M distributed over a volume V as follows

$$\mathbf{R} = \frac{1}{M}\int \rho(r) r dV \tag{13.33}$$

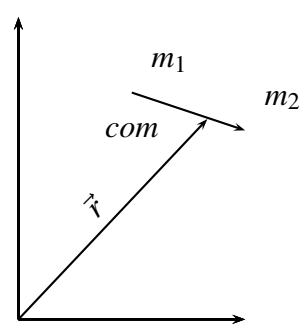

Figure 3.5: Center of Mass

Using Newton's law for the magnitude of the force allows the torque to be written in terms of the tangential angular acceleration.

$$\tau = mra = mr^2\alpha \tag{13.50}$$

In the case of a solid mass of finite dimensions, the torque can be written in terms of the moment of inertia.

$$\tau = \int mr^2\alpha dV = I\alpha \tag{13.51}$$

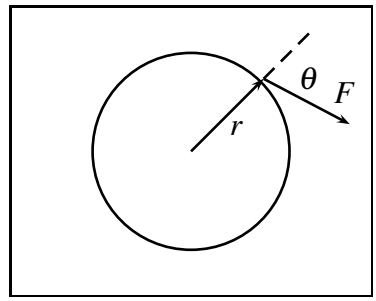

Figure 3.8: Torque due to force F acting on a rotating mass point.

It is important to note that the torque is the time rate of change of angular momentum.

$$\tau = \frac{dL}{dt} \tag{13.52}$$

Therefore, If the net torque acting on the body is zero, the angular momentum will be **conserved**. This important conservation law is the rotational parallel to the linear conservation law which states that if the linear force acting on a particle is zero, the linear momentum is conserved.

Finally, the work done by a torque acting through an angle $\Delta\theta$ is $W = \tau\Delta\theta$ so that the power delivered by a torque becomes

$$P = \tau\omega \tag{13.53}$$

13.7 Comparison of Rotational and Linear Formulas

A side-by-side comparison of rotational formulas to non-rotational formulas proves helpful in understanding the parallel nature of these two disciplines as illustrated in table 3.1 below.

Problems

40. In 1934 J.W. Beams and co-workers at the University of Virginia showed that it was feasible to separate isotopes of Uranium in a gas centrifuge. If a centrifuge is rotating at 20,000 rps and has a radius of 0.500 m. What

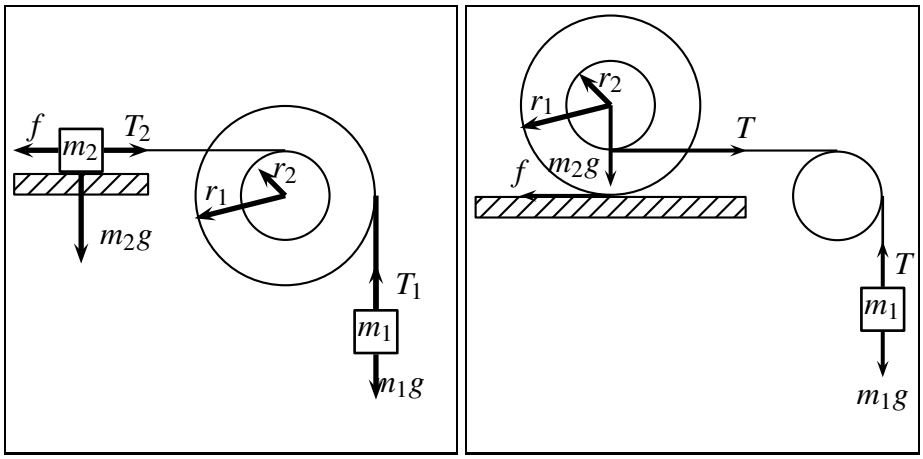

Figure 3.11: Pulling a block across the table (A) and pulling a compound cylinder across the table.

Combining and solving for α gives

$$\alpha = \frac{(m_1 - m_2)gR}{I_o + m_1R^2 + m_2R^2} \tag{14.16}$$

14.5 Pulling a Block Across Table

When a block of mass m_2 is placed on a table and attached to a pulley being rotated by the weight of another block of mass m_1 the acceleration of the pulley is retarded by the force of kinetic friction.

The equations needed to relate all the variables in this example are

$$m_1g - T_1 = m_1a_1 = m_1r_1\alpha \tag{14.17}$$

$$T_2 - \mu m_2g = m_2a_2 = m_2r_2\alpha \tag{14.18}$$

$$r_1T_1 - r_2T_2 = I_o\alpha \tag{14.19}$$

The frictional force f has been set equal μm_2g in these equations. Combining and solving for α gives

$$\alpha = \frac{(m_1r_1 - \mu m_2r_2)g}{I_o + m_1r_1^2 + m_2r_2^2} \tag{14.20}$$

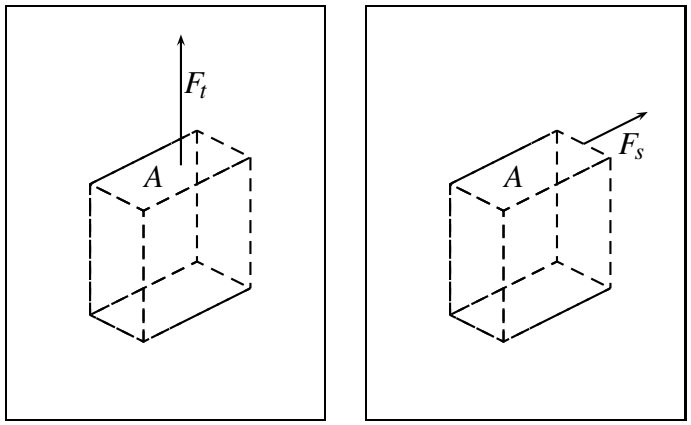

Figure 4.1: Tensile and Shearing Forces

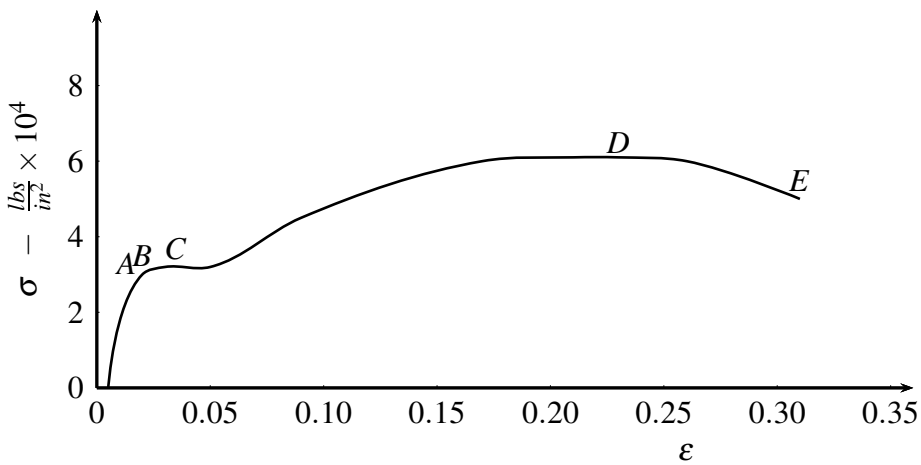

Figure 4.2: Stress-strain curve for typical material

Materials differ greatly in the exact profiles of their curves. For example, metallic materials are commonly classified as **ductile** or **brittle** materials. Brittle materials rupture at a much smaller strain than ductile materials. An arbitrary dividing line between these types of materials is usually taken as a strain value of 0.05.

17 Hooke's law

There are four ways to put materials under stress: (a) linear stretching and compression, (b) shearing stress, (c) volumetric stress and (d) twisting or torsional

Then if we define the isobaric volume expansivity by

$$\beta = \frac{1}{V}\left(\frac{\partial V}{\partial T}\right)_P \tag{25.2}$$

and the isothermal volume compressibility by

$$k = \frac{1}{V}\left(\frac{\partial V}{\partial P}\right)_T, \tag{25.3}$$

the differential equation for dV can be written as

$$dP = \beta B dT - \frac{B}{V} dV. \tag{25.4}$$

This equation will have use in thermodynamics in several ways. For example suppose a mass of Mercury is held at a pressure of $P_i = 1\,atm$ and a temperature of 0^oC and kept at constant volume while the temperature is raised by 10 degrees. Using the volume expansivity coefficient of $1.81 \times 10^{-4}\,deg^{-1}$ and a volume compressibility coefficient of $2.50 \times 10^{11}\,dynes/cm^2$, we can calculate the final pressure in the system to be $P_f = 450\,atm$.

The fundamental relationship between the thermodynamic variables which describe a system is called an **equation of state**. All the thermodynamic variables in an equation of state may be independent except for one. We have already identified the equation of state for an ideal gas, $PV = nRT$ which embodies three other laws of physics, Boyle's law (PV/T = constant), Charles' law ($V = kT$ at constant pressure) and Gay-Lussac's law ($P = kT$ at constant volume). However, real gases only obey this law approximately. Several other equations of state more accurately describe real gases and include those of Van der Waals (1873), Beattie-Bridgeman (1928) and Redlich & Dworg (1949). We can visualize a system as being represented by a point in a three-dimensional coordinate system where the coordinates are pressure P, volume V and temperature T as illustrated in figure 6.1. The points labeled $(P_1V_1T_1)$ and $(P_2V_2T_2)$ represent the system at two possible points on the diagram.

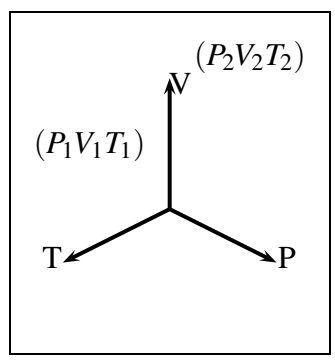

Figure 6.1: Thermodynamic system on PVT diagram.

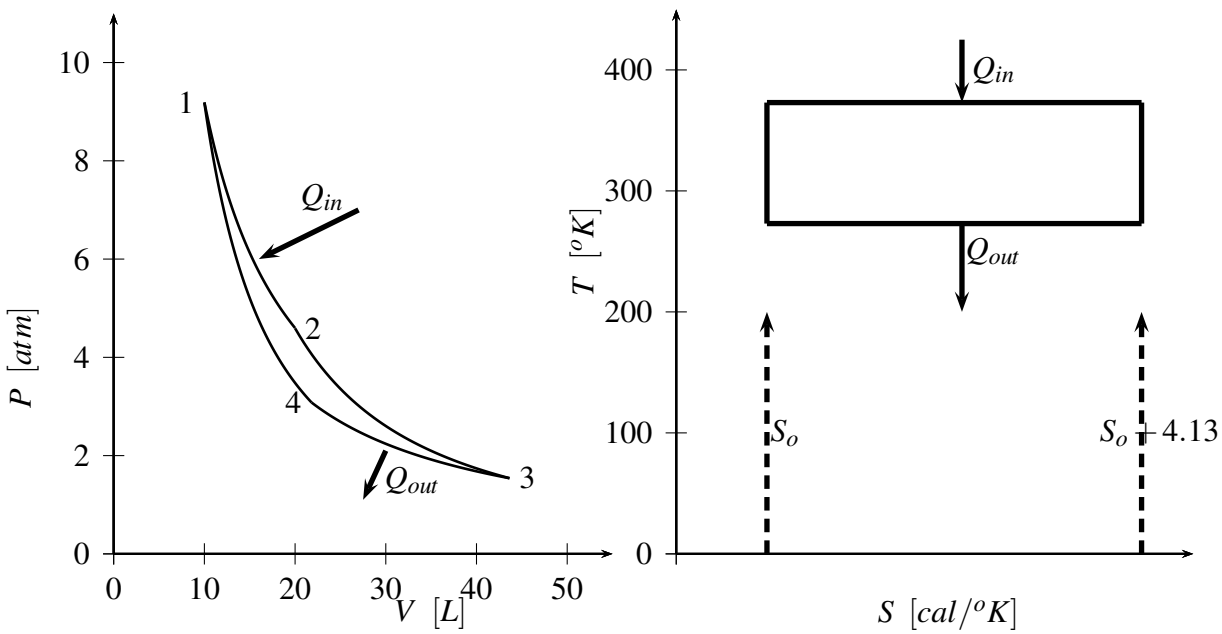

Figure 6.12: Carnot cycles on PV and TS diagrams.

We will take the working gas for the Carnot engine to consist of 2.00 moles of gas with $C_p = 6.95\ calories/mole^oK$ and $C_v = 4.96\ calories/mole^oK$ and the constant $\gamma = 1.40$. We also assume the working gas obeys the ideal gas law

$$PV = 0.082nT \tag{34.1}$$

and the adiabatic rule, which can be written as

$$P_1V_1^{1.4} = P_2V_2^{1.4} \tag{34.2}$$

To start the analysis, we will assume the Carnot cycle operates between the boiling temperature of water, 373 degrees K, and the freezing temperature of water, 273 degrees K. It is difficult to define pressure in an engine, so we will start with a volume of 10.00 liters and assume an isothermal expansion to a volume of 20.00 liters. The remainder of the points can be calculated using the ideal gas law and adiabatic rule.

$$P_1 = nRT_1/V_1 = (2)(0.082057(373)/10.00 = 9.18\ atm \tag{34.3}$$

At the point $V_2 = 20$ liters the ideal gas law can be used again to calculate P_2,

$$P_2 = nRT_2/V_2 = (2)(0.082057)(373)/20.00 = 4.59\ atm \tag{34.4}$$

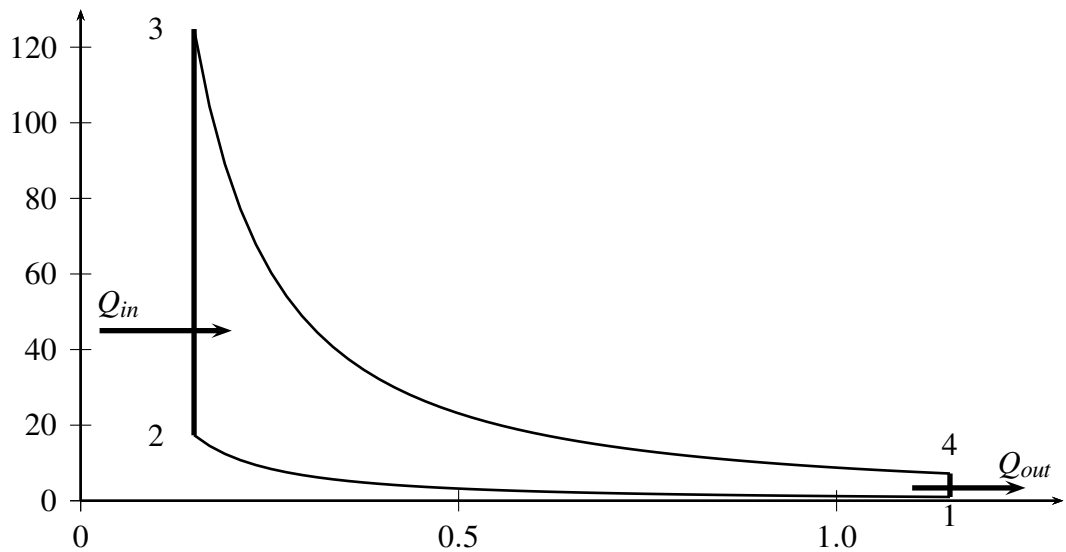

Figure 6.13: Otto cycle.

Point	P	V	T
1	1.00	1.15	300
2	17.32	0.15	689
3	124.8	0.15	4883
4	7.21	1.15	2162

Process	dU	dQ	dW	dS
1–2	88	0	-88	0
2–3	976	976	0	0.46
3–4	-632	0	632	0
4–1	-432	-432	0	-0.46

Table 6.8: End point values of PVT with Work and Energy in the Otto cycle

A formula for the thermal efficiency of the air standard Otto cycle can also be obtained by substituting the formulas used to calculate work and heat input into equation 33.35 and taking account for adiabatic processes $T_3/T_2 = T_4/T_1$.

$$\eta = 1 - \frac{W_{net}}{Q_{input}} = 1 - \frac{T_4}{T_3} = 1 - \frac{2162}{4883} = 0.557 \tag{34.45}$$

34.3 Air Standard Diesel Cycle

The Diesel engine, invented by Rudolph Diesel in 1897, is described by a thermodynamic cycle which involves four strokes (1) an adiabatic compression followed by (2) isobaric heating, (3) adiabatic expansion and (4) isochoric cooling as illustrated in figure **??**. For this example we have